The smart process guard locking HOLDX R

The new generation of magnetic process guard lockings - Award winners, innovative and intelligent.

The HOLDX R series cleverly combines a secure non-contact RFID safety sensor with an intelligent electromagnet in a single device. With this combination of safe position monitoring and process guard locking, the HOLDX R is universally applicable and ensures increasing quality as well as less downtime and set-up times.



innovative | **smart** | **safe**

MM MaschinenMarkt AWARD zur automatica 2018

GIT SICHERHEIT AWARD 2019 WINNER



Two designs for your application

HOLDX RS

In its small and compact design, the HOLDX RS enables a locking force of 600 N. In addition to the locking force of the electromagnet, the movably supported anchor plate has a 50 N permanent magnet which prevents a door from instant opening.



HOLDX RL

Ideal for large doors. Thanks to the locking force of 1200 N, the HOLDX RL prevents doors from tearing open. With a slim width of only 35 mm, the guard locking is ideal for space-saving installation on aluminum profile systems. Like the HOLDX RS, the guard locking has also has a permanent magnet of 50 N, which prevents a door from opening.

Simple installation, reduced commissioning time

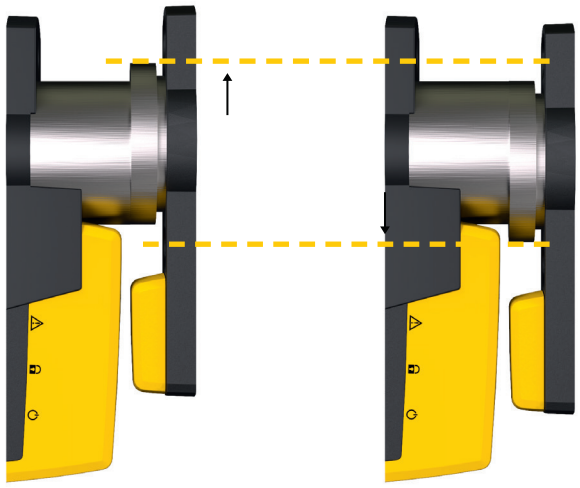

Flexible door offset

Through the combination of RFID technology and a modern electromagnet, HOLDX R allows a large tolerance in door offset and thus significantly increases machine availability even with inaccurate door guidance.

Simplified application

- ✓ Reduced commissioning time thanks to flexible assembly concept on aluminum systems
- ✓ Pigtail connection reduces cable diversity (straight and angled cables)
- ✓ Reduced machine downtime thanks to diagnostic function

Quick installation

- ✓ 600 N locking force for small flaps
- ✓ 1200 N locking force for heavy doors
  50 N permanent latching force (optional)
- ✓ Flexible adjustment of latching force from 0-50 N via free mobile app or desktop software
- ✓ Integrated magnetic flux measurement for contamination diagnosis



Extended LED diagnosis

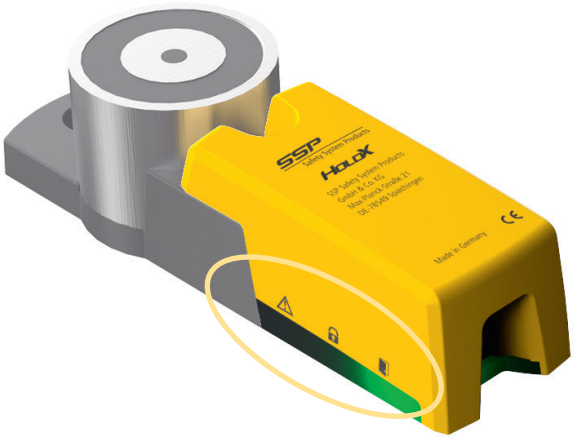

The smart HOLDX R process guard locking enables simple and fast diagnostics thanks to LEDs on both sides. It immediately detects if another process guard locking in the system does not achieve the desired locking force or if there is a fault in the input or output circuit of the guard locking. In this way, you can clean or realign the guard locking completely in line with the preventive maintenance of your system.

Extended LED diagnosis

Green	Safe sensor function
on	OSSD input circuit available, Door closed
flashes 1x	Door opened
flashes 2x	OSSD input circuit not available, Door closed
flashes 3x	Actuator at the reception limit, Switching distance in limit range

Blue	Guard locking function
off	Magnet not actuated
on	Door closed, Locking force available
flashes 1x	Door closed, Locking force not reached
flashes 2x	Door opened, Magnet actuated

Red	Fault diagnosis
off	No error present
on	Internal device error
flashes 1x	Error safety outputs
flashes 2x	Error safety inputs
flashes 3x	Overvoltage or undervoltage
flashes 4x	Error door torn opened
flashes 5x	Temperature outside the permitted range
flashes 6x	Wrong RFID actuator
flashes 7x	Error magnetic flux measurement

Green	Red	Blue	System states
on	on	on	Device start
flashes 2x	flashes 2x	flashes 2x	Teach-in process only for relearnable variant

Predictive maintenance thanks to self-monitoring





The smart HOLDX R process guard locking communicates with your standard PLC via the diagnostic outputs or via the built-in Bluetooth interface with your mobile phone or laptop.

HOLDX R independently and intelligently monitors the application and the process as well as the downstream actuators in the safety circuit. This enables you to find errors quickly and easily, without the need for additional measuring or diagnostic equipment.

Innovative, intelligent technology

- ✓ Detects a system failure by magnetic flux measurement before it occurs
- ✓ Manipulation attempts can be detected subsequently
- ✓ Monitoring of downstream participants and B_{10D} values
- ✓ Monitoring of lifetime according to EN ISO13849-1, notification before exceeding for timely ordering and replacement of spare parts.
- ✓ Actuation of the door magnet during commissioning even without a running safety PLC
- ✓ Flexible adjustment of the latching force
- ✓ Status information on the current locking force
- ✓ Information about power interruption, short circuits or cross circuits
- ✓ Software password protection against manipulation

HOLDX R - standalone versions



Flexible
Movable anchor plate

Magnetic power
600 N locking force variant S
1200 N locking force variant L
50 N permanent magnet

Compact design
Installation on aluminum profiles
from 35 mm construction width

Intelligent failure monitoring
By magnetic flux measurement

Secure electrical locking
acc. to PLe EN ISO 13849-1

High coding
2 coding levels acc. to EN 14119
Standard/ individually coded

LED diagnosis
Extended status display

Connection
flexible pigtail cable
with M12 8-pin or M12 12-pin

Advantages in the safety application

- ✓ PLe acc. to EN ISO 13849-1
- ✓ Series connection of up to 30 guard lockings without loss of safety

Advantages in assembly and wiring

- ✓ Process guard locking is to be used as stop
- ✓ High protection classes IP67 for use in harsh environments
- ✓ Flexible wiring concept with the passive distributor XCONN or wireless distributor

Diagnosis advantages

- ✓ Extended diagnosis to standard PLC via one output / input
  - Door open / closed
  - Door locked
  - Locking force not reached
  - Door torn opened
  - Error in the input circuit of the guard locking
  - Error in OSSD output circuit of the guard locking
  - Wrong actuator
- ✓ Functional modules for Siemens / Beckhoff / Rockwell/ B&R available on the homepage for evaluation of diagnostics

Electrical connection

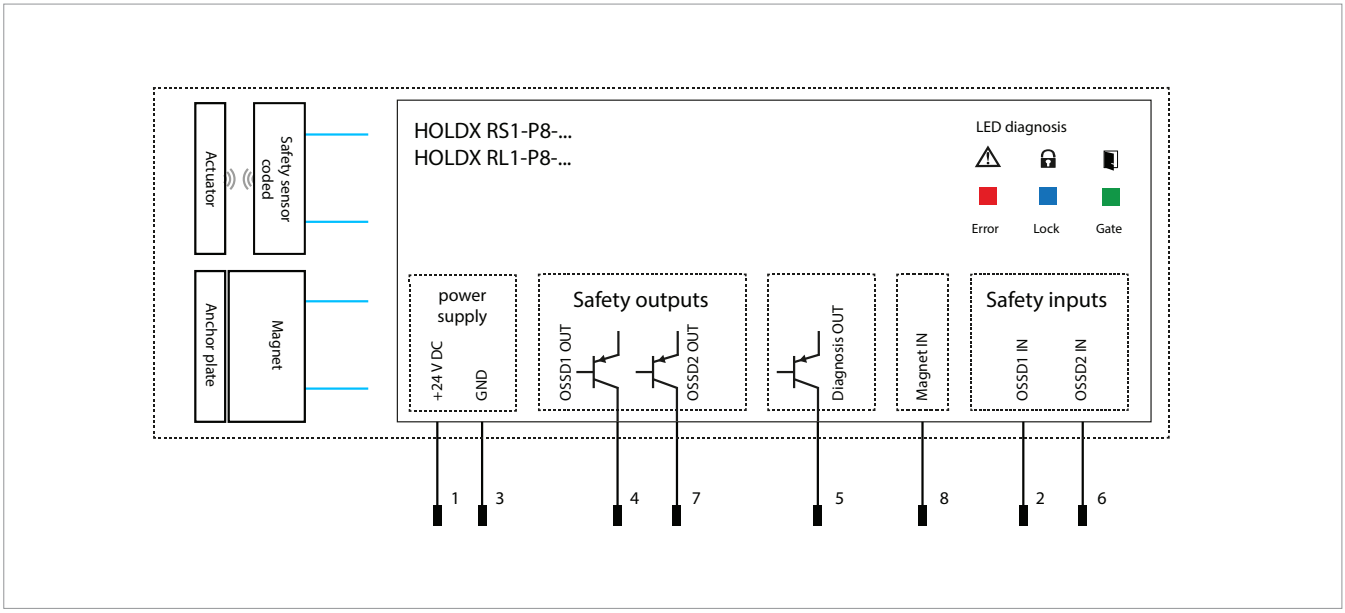

HOLDX R_1 standalone 8-pin pigtail without EDM function

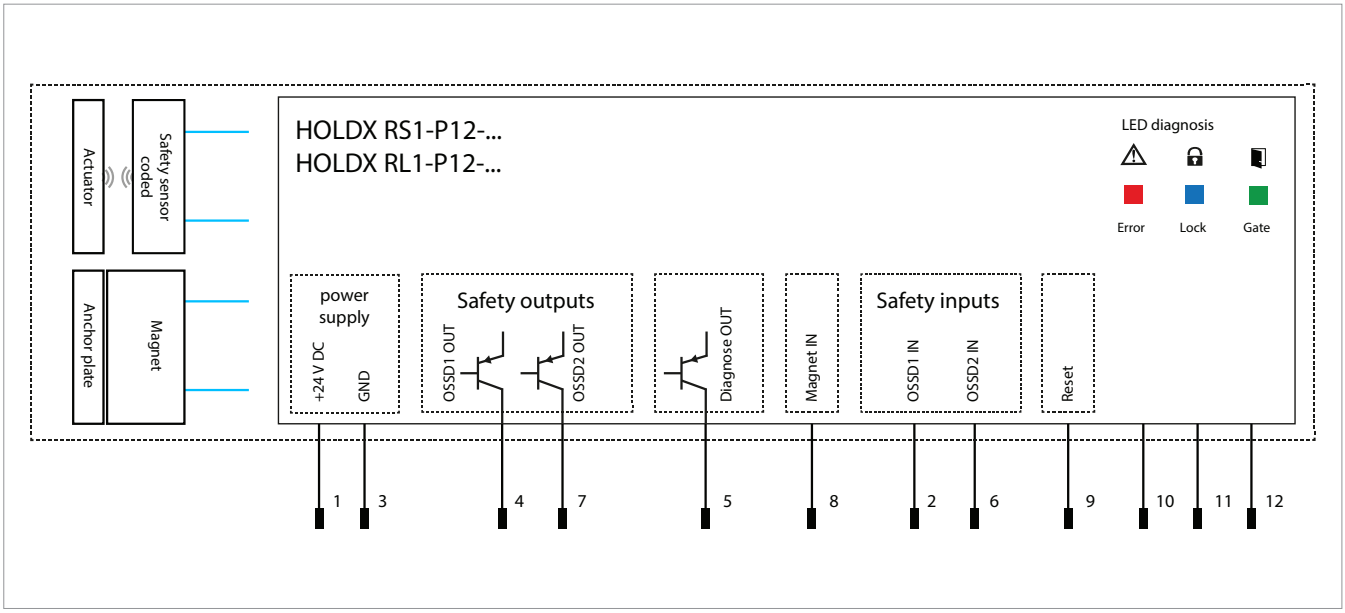

HOLDX R_1 standalone 12-pin pigtail with EDM function

Diagnostics via an output

The Serial-Out diagnosis output of the HOLDX RS1 and RL1 provides the higher-level PLC with up to 10 pieces of information. The free-of-charge blocks for diagnosis evaluation for a Siemens, Beckhoff, Rockwell or B&R standard PLC's are available on our website ww.safety-products.de.

Diagnostic input (magnet ON)

The guard locking function can be switched on via the "magnet ON" input. If the input is activated via the communication module on the standard PLC, the built-in Bluetooth interface can be switched on / off.

HOLDX R - networkable versions



Flexible
Movable anchor plate

Magnetic power
600 N locking force variant S
1200 N locking force variant L
50 N permanent magnet

Compact design
Installation on aluminum profiles from 35 mm construction width

Intelligent failure monitoring
With the aid of magnetic flux measurement

Secure electrical locking
acc. to PLe EN ISO 13849-1

High coding
2 coding levels acc. to EN 14119
Standard/ individually coded

LED diagnosis
Extended status display

Connection
2 flexible pigtail cable with M12 8-pin or M12 12-pin for easy wiring

Advantages of intelligent series connection

- ✓ Series connection of up to 17 process guard lockings up to PLe according to EN ISO 13849-1
- ✓ Up to 170 diagnostic information are available in the system with series connection
- ✓ Each process guard locking can be controlled individually
- ✓ Evaluation of diagnostics on the standard PLC without gateway
- ✓ Functional modules for Siemens / Beckhoff / Rockwell/ B&R available on the homepage for evaluation of diagnostics
- ✓ Wireless transmission of safe and non-safe diagnostic information even with series connection via the wireless safety PLC Safety Simplifier

Addressing without laptop & without software

Simply address the HOLDX RS2 and RL2 process guard lockings via the selector switch. In addition to the master, set up to 16 additional slaves once.

Electrical connection

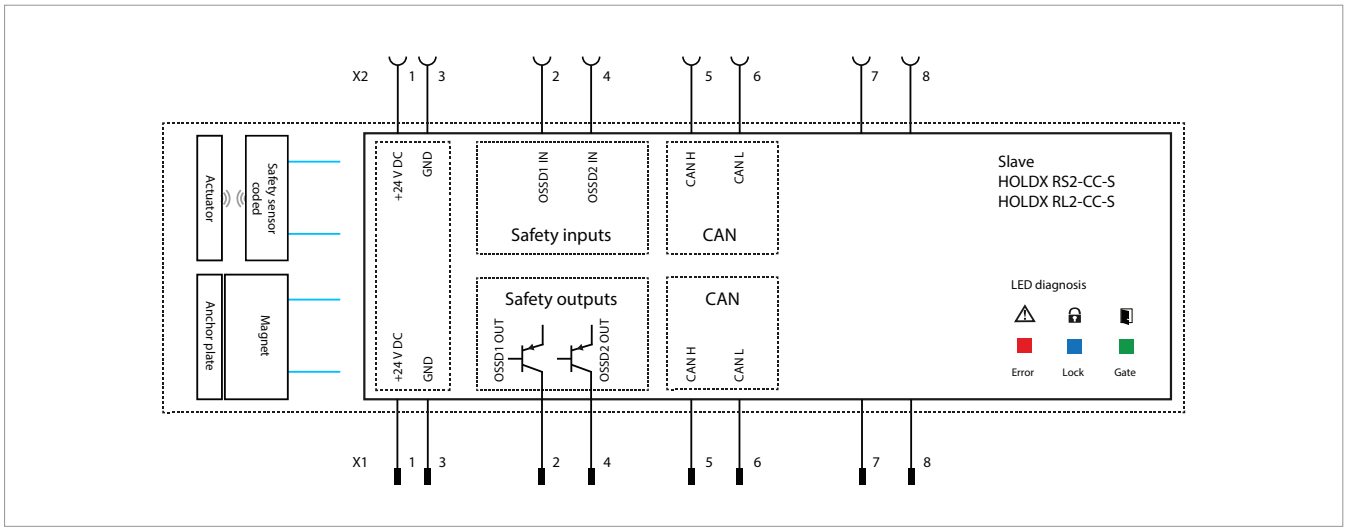

HOLDX R_2 slave 8-pin pigtail

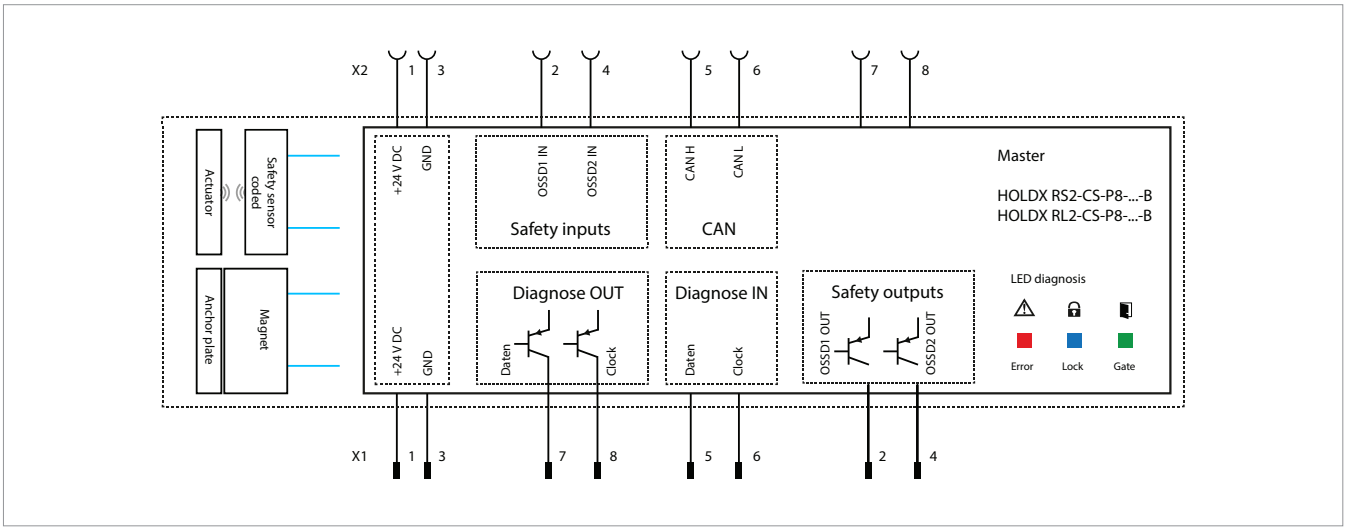

HOLDX R_2 master 8-pin pigtail

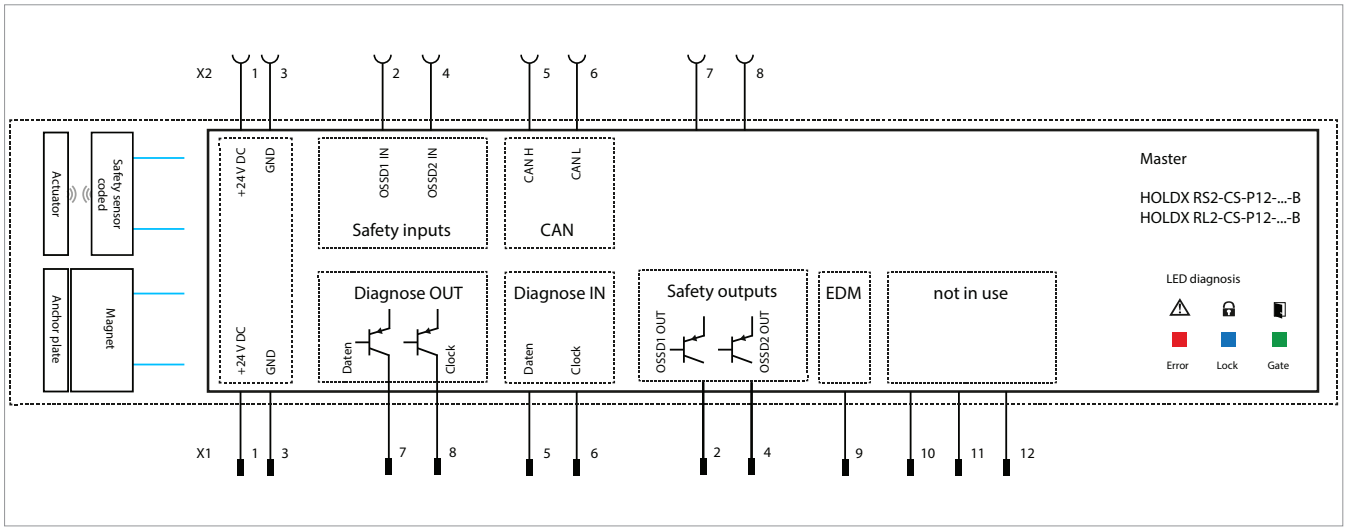

HOLDX R master 12-pin pigtail with EDM function and manual or automatic reset

Intelligent combination of series connection and high diagnostics



Reduction of commissioning time

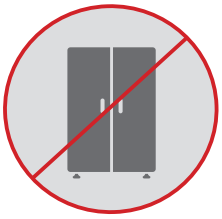

Reduce your effort and do without an additional, external safety PLC or switch cabinets for the safety technology. Thanks to the Safety Simplifier with IP65 protection, you no longer need them. The wiring effort of the safety components is reduced to a minimum using the safe wireless communication.

Thanks to the two existing pigtail connections, Y-distributors and terminal boxes are no longer necessary. The line is simply looped through from process guard locking to process guard locking.

Thus, up to 17 smart HOLDX R process guard locking act on a safety circuit. The guard lockings connected in series are simply evaluated with the aid of a Safety Simplifier. The communication between the robot control cabinet and the control cabinet of the machine controller is then securely transmitted via a wireless network.

Status information can be evaluated and visualized by the standard PLC. The interface can be easily configured with the free-of-charge functional modules from SSP. All information of the security chain and the diagnosis is transmitted.



WIRELESS
Safety Communication
SIL 3, Ple, cat 4

