Safety System Products

SSP Safety System Products GmbH & Co. KG
Zeppelinweg 4
D-78549 Spaichingen
www.safety-products.de

This operating manual is a translation of the original operating manual. All rights, errors and changes reserved.

1000277
Version 1.0
June 2020

Depending on equipment of your device, description of optional functions in the form of additional sheets will be provided as a complement to this operating manual.

HOLDX RL1

Magnetic process guard locking

Table of Contents

1 Information about this document 2
1.1 Function 2
1.2 Safety instruction for the authorized skilled personnel 2
1.3 Symbols 2
1.4 Scope of application 2
1.5 Attention: Safety Instructions 2
1.6 Attention: Incorrect use 2
1.7 Liability Disclaimer 2
2 Product Description 2
2.1 Intended Use 2
2.2 Design types 2
2.3 Special design types 2
2.4 Mode of operation 3
2.5 Principles of action of the magnetic force monitoring 3
2.6 Series connection 3
2.7 Protection against manipulation acc. to EN ISO 14119 3
2.8 Technical data 4
3 Installation 5
3.1 Dimensions 5
3.2 General installations notes 6
3.3 Alignment of the HOLDX and anchor plate with marking 6
3.4 Adjustment 6
3.5 Installation on swing doors 7
3.6 Installation on sliding doors 7
3.7 Approach directions 8
3.8 Switching distance 8
3.9 Limit range monitoring 8
4 Electrical connection 9
4.1 General notes for electrical connection 9
4.2 Requirements for a downstream evaluation 9
4.3 Safety controller configuration 9
4.4 Electrical connection diagram 9
5 Inputs and outputs function 10
5.1 Mode of operation of the safety outputs 10
5.2 Safety inputs 10
5.3 Reset input, only with version HOLDX RL1-12P 10
5.4 Input magnet on 10
5.5 Diagnosis output 10
6 Operating states and diagnosis 10
6.1 Switching and operating states 10
6.2 LED display, flashing codes, clocking diagnosis output 11
7 Commissioning 12
7.1 Function Test 12
7.2 Teach-in process 12
8 Maintenance 12
8.1 Maintenance 12
8.2 Damaged or defective devices 12
9 Disassembly and Disposal 12
9.1 Removal 12
9.2 Disposal 12
10 Appendix 12
10.1 Electrical connection 12
11 Equipment 15
11.1 Equipment for HOLDX RL1 15
12 Declaration of Conformity 16
12.1 EC Declaration of Conformity 16

1. Information about this document

1.1 Function

This operating manual provides all necessary information for the assembly, installation, safe operation and disassembly of the safe locking device with guard locking for process protection. The operating manual must always be readable and available during the operating life of the device. Read the operating manual carefully before using the device. Always hand this operating manual over to future owners and users of the device. Add any supplement received from the manufacturer to the operating manual.

1.2 Safety instruction for the authorized skilled personnel.

The tasks described in this operating manual may only be carried out by trained skilled personnel authorized by the plant owner. You must read and understand the operating manual before starting the HOLDX RL1 process guard locking with safety function. Familiarize yourself with the applicable rules and regulations relating to industrial safety and accident prevention. National and international legislation apply to assembly, installation and regular technical inspections.

1.3 Symbols

Caution

If the warnings are not observed, faults or malfunctions as well as injury to persons and/or damage of the machines can occur.

Information

Helpful additional information

1.4 Scope of application

The described products have been developed to be a part of an overall system or machine-safety related applications in process and automation technology. The manufacturer of the plant or machine is responsible for ensuring the correct overall function of the system.

The process guard locking with safety function may only be used in accordance with the following versions or for applications approved by the manufacturer. For detailed information on the application see Section 2 Product Description.

1.5 Attention: Safety Instructions

Observe the safety instructions in the operating manual, which are identified by above symbol for caution or warning. Follow national installation, safety and accident prevention regulations. For additional technical information refer to SSP data sheets or visit our website at www.safety-products.de.

All information is supplied without liability. We reserve the right to make technical modifications for reasons of improvement. No remaining risks are known, if the safety notes and instructions regarding assembly, installation, operation and maintenance are followed.

1.6 Attention: Incorrect use

Danger to persons or damages to parts of machines or installations can arise as a result of inappropriate or incorrect use or manipulation of the process guard locking. Please observe the related information in the standard EN ISO 14119.

It is prohibited to use with HOLDX RL1 spare parts or accessories, which have not been expressly approved by the manufacturer.

1.7 Liability Disclaimer

We accept no liability for damages or operational malfunctions resulting from improper installation or failure to comply with this operating manual. No other liability is accepted by the manufacturer for damages resulting from use of spare parts or accessories, which have not been approved by the manufacturer. Any unauthorized repairs, reconstructions and modifications are not permitted for safety reasons and rule out liability of the manufacturer for resulting damages.

2. Product Description

2.1 Intended Use

The device can only be used in industrial applications. In conjunction with a movable guard and the machine control, this safety component prevents dangerous machine functions from being carried out as long as the guard is open. If the protective device is opened during the dangerous machine function, a stop command is triggered.

Important

Position of the safety switch

Since the safety switch is not intended for guard locking with personal protection, the protective device monitored by the safety switch must be positioned in such a way that the access time corresponds at least to the stopping time of the machine.

2.2 Design types

This operating manual is valid for the following design types:

Type code HOLDX R ① 1- ② P- ③ - ④

① Design

L	Long design

② Connection

8	Pigtail connection 195 mm, M12 8-pin male connector
12	Pigtail connection 195 mm, M12 12-pin male connector

③ Coding variant

S	Standard coding
I	Individual coding
W	Individual, relearnable coding

④ Extended interfaces

B	Bluetooth

Anchor plate with RFID tag

HOLDX RL-A1	fixed grid 50 N (permanent guard locking)
HOLDX RL-A2	without fixed grid

2.3 Special design types

For special design types, that are not listed in the type code in Section 2.2, the above and following information is accordingly applicable if they correspond to the standard design.

2.4 Mode of operation

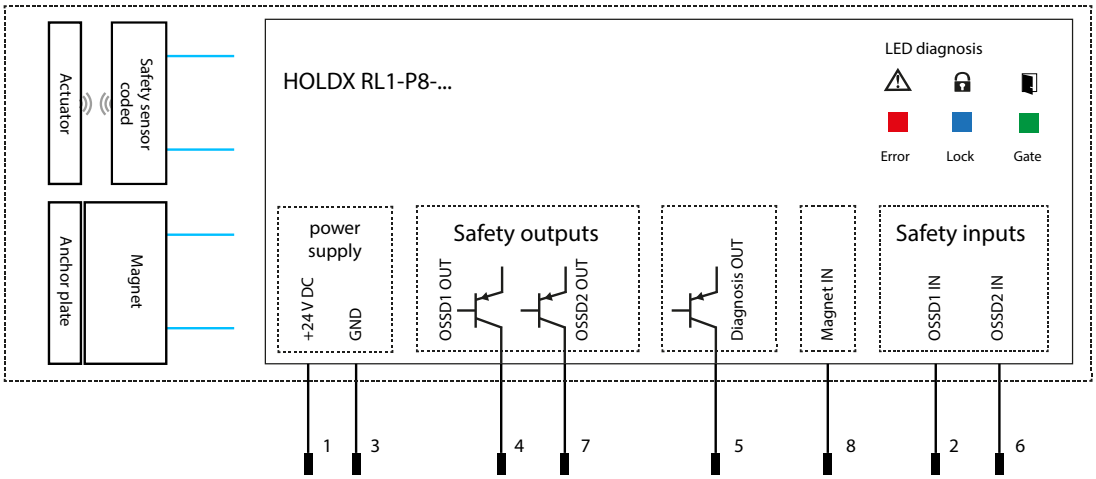

Fig.1: Coded, electronic process guard locking with safety sensor, which is actuated contactless by a coded anchor plate. The safety sensor monitors the position of rotating, laterally movable or removable protective devices with the coded electronic anchor plate.

The safety function consists of safely switching off the safety outputs when the protective device is opened. Furthermore, the safety outputs remain in the safer switched-off position when the protective device is open. This can be done in conjunction with an SSP safety evaluation unit or comparable safety controllers.

For versions with integrated reset input (see type codes in Section 2.2), the process guard locking can also be used without additional safety evaluation units/controllers.

By applying a 24 V high signal at the "Magnet ON Pin 8" input, the locking magnet is activated and the door is locked after closing. The current locking force is evaluated via a magnetic flux measurement. The locking force has no influence on the safe OSSD outputs.

The diagnostic output "Serial-OUT Pin 5" of the process guard locking provides information on door position, magnetic force and possible faults. Further information on the diagnostic output can be found in Section 5.5 Diagnosis output.

A permanent latching force is possible due to the optional built-in permanent magnet in the anchor plate. A smart locking force can be set via the "HOLDX-Manager" software. The permanent latching force keeps the door closed (50 N) even in a de-energized state. The smart locking force keeps the door closed even when the electromagnet is switched off (adjustable 0-50 N). For the setting of the latching force, refer to the operating instructions of the "HOLDX-Manager" software. The document and the software can be found on the Internet at www.safety-products.de.

Information

The overall concept of the control system in which the safety component is integrated, shall be validated in accordance with the relevant standards.

2.5 Principles of action of the magnetic force monitoring

The locking force F is constantly monitored and measured electronically. Thus, a dirty guard locking or a sub-optimal installation is detected. If the locking force falls below 800 N, a message is sent via the "Output Serial-Out Pin 5".

In addition, the status is indicated by the blue LED on the side of the housing. The current locking force can be controlled at any time via the optional built-in Bluetooth interface and the "HOLDX-Manager" software.

2.6 Series connection

Provided the wiring is correct, the HOLDX RL1 process guard locking with safety function enables series connection of up to 30 sensors with simultaneous achievement of up to PL e/ category 4 according to EN ISO 13849-1. In the case of series connection, it must be noted that time delays add up for each sensor. The corresponding technical data can be found in the table in Section 2.9 Technical data.

Note

The evaluation and design of the safety chain must be carried out by the user in accordance with the relevant standards and regulations and depending on the required safety level.

If several process guards are involved in the same safety function, the PFH values of the individual components must be added together.

Wiring examples can be found in Section 10.1.

SISTEMA libraries and other wiring examples, e.g. with our passive junction XCONN or the wireless safety controller "Safety Simplifier" can be downloaded from our website www.safety-products.de.

2.7 Protection against manipulation acc. to EN ISO 14119

Standard coding

The process guard locking accepts any HOLDX RL anchor plate, low coding level according to EN ISO 14119. Variants are listed in Section 2.2.

Custom coding

The process guard locking only accepts the HOLDX RL1 anchor plate included in the scope of delivery. The pair of process guard locking and anchor plate cannot be separated, if one component is lost or non-functional, both components must be replaced. Type 4, high coding level according to EN ISO 14119.

Individual coding, relearnable

The process guard locking only accepts the HOLDX RL1 anchor plate. This anchor plate is taught in firmly on the safety sensor, an unsuitable anchor plate in the detection range of the sensor leads to an error. The teach-in of a new anchor plate is possible an unlimited number of times and is described in detail in Section 7.2 Teach-in procedure. Type 4, high coding level according to EN ISO 14119.

2.8 Technical data

Safety data	
Performance level (EN ISO 13849-1: 2015)	PL e
category (EN ISO 13849-1: 2015)	Cat. 4
SIL (EN IEC 62061: + A2:2015) SIL CL3	
SIL (EN IEC 61508: 2010)	SIL3
- Hardware fault tolerance	HFT 1
- PFH_D	2.24 x 10^{-9}
Service life (EN IEC 62061)	20 years
Ambient Conditions	
Operating temperature max.	-25 ... + 55°C
Storage temperature max.	-25 ... + 70°C
Protection class	IP67

Electrical data	
Supply voltage	24 VDC, (+10/-15%)
Power consumption (incl. OSSD outputs)	7 W
Nominal current (at 24 VDC)	645 mA
Idle current I_0	60 mA
Number of safety inputs	1 × 2-channel
Number of reset inputs	1 (only in version HOLDX RL1-12P)
Current consumption per input max.	2.75 mA
Current consumption input magnet ON	1.2 mA
Number of OSSD safety outputs	1 × 2-channel
Safety output: Output type	Transistor (PNP)
Switching current per safety output max.	100 mA (DC-12/DC-13)
Voltage drop safety output (U_d)	0.75 V
Residual current safety output (I_r)	0.5 mA
Load capacity safety output max.	20 nF
Number of diagnosis output	1
Diagnosis output: Output type	Transistor (PNP)
Switching current per diagnosis output max.	100 mA
Connection type	(version HOLDX RL1-8P) M12 8-pin, pigtail 200 mm
	(version HOLDX RL1-12P) M12 12-pin, pigtail 200 mm
Series connection for safe inputs and outputs	max. 30 process guards
Protection class power supply (EN 61140: 2007-03)	III
Stabilized PELV/SELV power supply required	

Mechanical data	
Electromagnet locking force	1200 N
Permanent latching force	50 N
Smart latching force	0 / 30 N / 50 N
Dimensions guard locking (W x H x D)	
- Width	34.4 mm
- Length	239.6 mm without cable
- Height	31.1 mm
Anchor plate dimensions (W x H x D)	
- Width	34.4 mm
- Length	224.1 mm
- Height	20.1 mm
Process guard locking weight	725 g
Anchor plate weight	475 g
Torque (mounting screw) process guard locking	6 Nm
Torque (mounting screw) anchor plate	6 Nm
Fastening	screwed connection with pan-head screws M6 Torx with pin (countersunk)
	fixation with medium-tight screw locking varnish, like Loctite 243
Guard locking housing materials	PBT GF30, aluminum anodized black, AlMgSi, TPE, PC
Anchor plate housing materials	PBT GF30, aluminum anodized black, S235 nickel-plated, EPDM/CR
Shock resistance	30 g / 11 ms
Vibration resistance	5-150 Hz, 1 g
	10-500 Hz, 3 g RMS

Switching distances acc. to DIN EN 60947-5-3:2014-12	
Secured switching distance ON S_{ao}	6 mm
Secured switching distance AUS S_{ar}	18 mm
Typical switching distance S_n	11 mm
Repeat accuracy R switching distances	< 0.5 mm
Hysteresis	2 mm

General times	
Standby recovery time t_v	5000 ms
Switch-on delay actuator t_{on}	75 ms

Safety functions times	
Switch-off reaction time inputs → outputs t_{off}	max. 3 ms
Switch-off reaction time anchor plate → outputs t_{off}	max. 75 ms
Test pulse length OSSD safety outputs	0.3 ms

Note

The power supply unit has to comply with rules and regulations for protective extra-low voltages (SELV, PELV). The inputs and outputs of the safety switch have to be equipped with a protective separation of voltage higher than 60 V AC.

Note

About the scope of UL approval: The devices have been tested according to the requirements of UL508 and CSA/ C22.2 no. 14 (Protection against electric shock and fire).

3. Installation

3.1 Dimensions

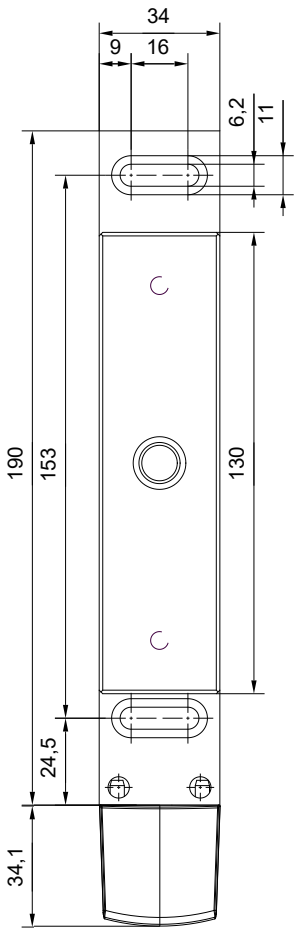

Anchorplate

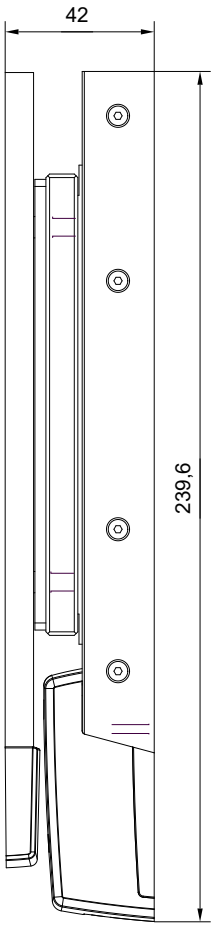

Anchorplate + Magnet unit

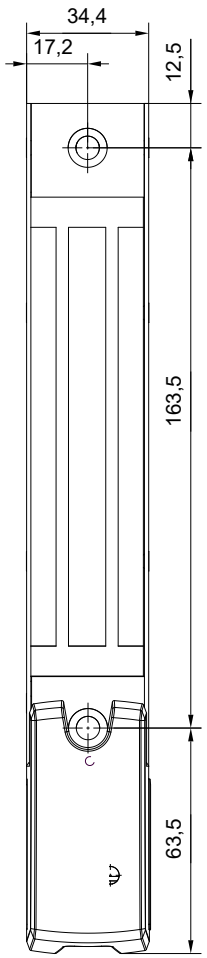

Magnet unit

Fig.2: HOLDX RL1 dimensions in mm

3.2 General installations notes

The requirements of the standard EN ISO 14119 must be taken into account during installation.

Precautions during installation

Observe the following instructions to prevent injuries or damages to the device.

The mounting holes allow mounting using M6 Torx pan-head screws with countersunk pin (safety screws) (max. tightening torque 6 Nm).

Screws made of non-ferromagnetic material (e.g. brass) must be used. The mounting position is arbitrary. However, the safety sensor and actuator must be mounted in parallel opposite each other.

Heat note

Should the temperature be over 60 °C, due to enviromental conditions or self-heating, an included label with „warning hot surface" has to be affixed.

The safety sensor may only be installed in the secured switching distances. The safety sensor and the actuator must be installed to the protective device by suitable measures (use of one-way screws, gluing, drilling of screw heads, pinning) and secured against displacement. In order to avoid system-related influence and reduction of the switching distances, please observe the following instructions:

- Metal parts near the sensor can change the switching distance
- Keep metal chips away
- Minimum distance between two process guards: 150 mm

Influence

Be aware that magnetic fields can delete data carriers and impact or destroy electronic or mechanic components, such as cardiac pacemakers. We are unaware of any negative influences for humans that originate from the magnetic fields of permanent magnets.

During direct contact to magnetic materials and systems, allergic reactions can arise (e.g. against ceramic and metallic materials as well as zinc, nickel and plastics).

The process guard locking with safety function may only be mounted on flat surfaces.

- The connecting cable of the safety sensor must be installed in such a way that it is protected against mechanical damage.
- During installation, also take into account the requirements of EN 60204-1, especially with regard to suitable installation. It is recommended to install the sensor connecting cable concealed.

3.3 Alignment of the HOLDX and anchor plate with marking

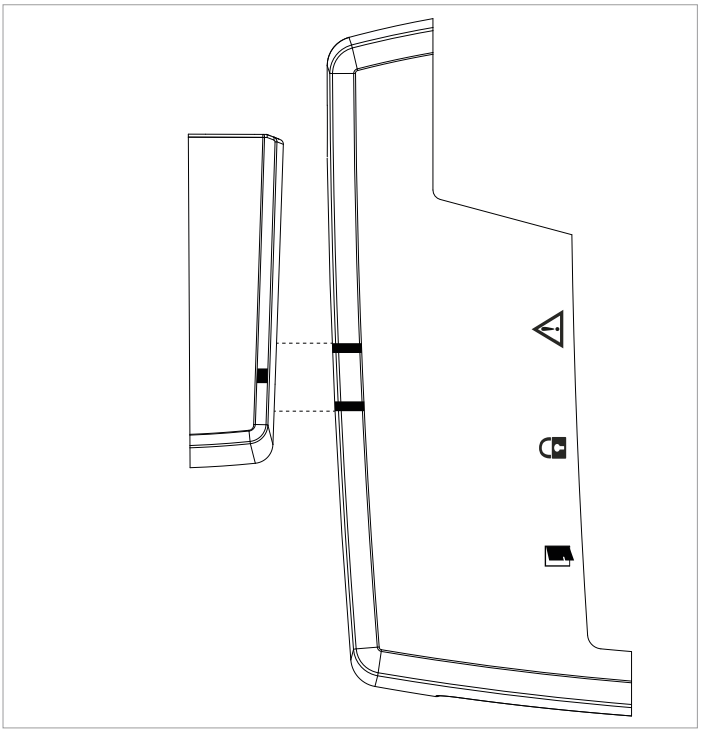

Fig.3: Line markers for aligning the HOLDX RL

3.4 Adjustment

The specified switching distances, see Section 2.9 Technical data, only apply for installation on non-metallic material if the safety sensor and actuator are mounted parallel to each other. Other arrangements may lead to different switching distances.

3.5 Installation on swing doors

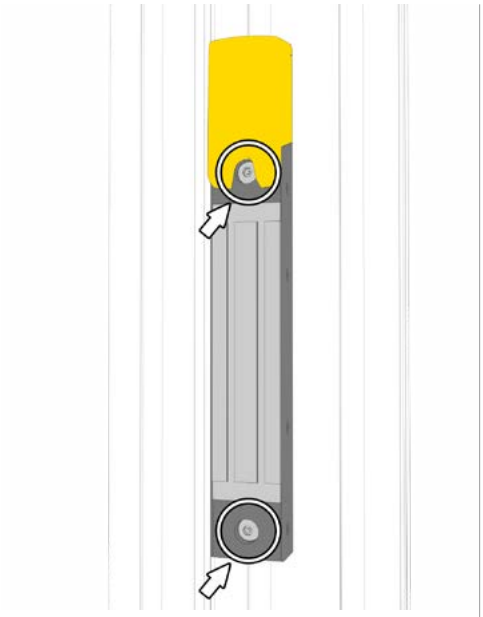

Fig.4: Attach the process guard locking to the profile at the desired height and tighten the Torx screws M6 x 25 mm.

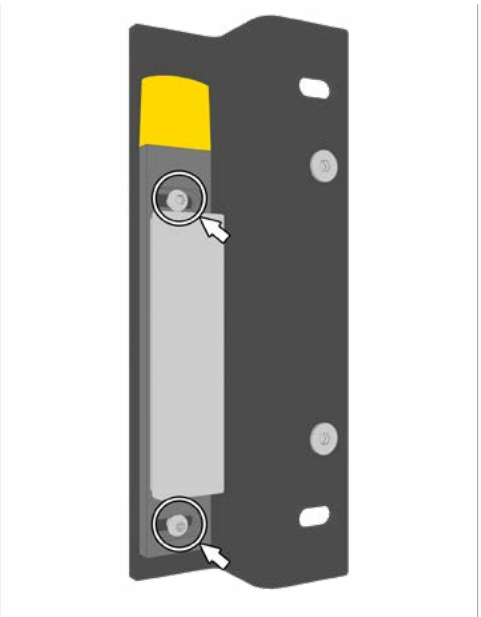

Fig.5: Attach the anchor plate to the mounting plate and tighten the Torx screws M6 x 8 mm.

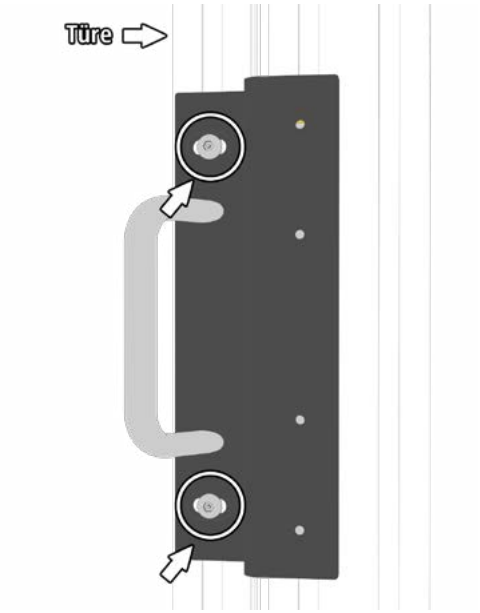

Fig.6: Attach the mounting plate with the anchor plate to the profile and align with the process guard locking. Tighten the Torx screws M8 x 12 mm.

3.6 Installation on sliding doors

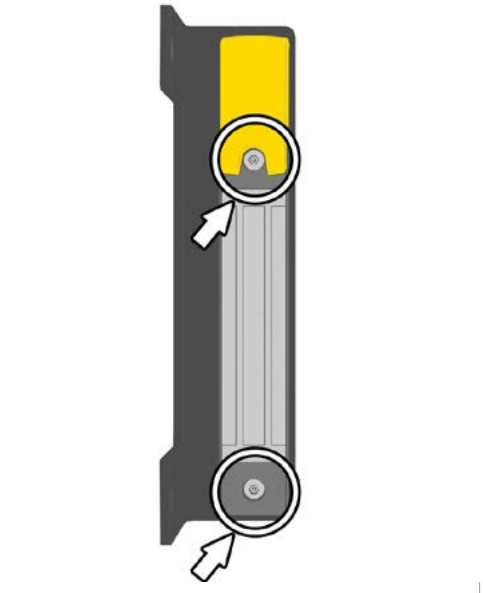

Fig.7: Attach the process guard locking to the mounting plate and tighten the Torx screws M6 x 25 mm.

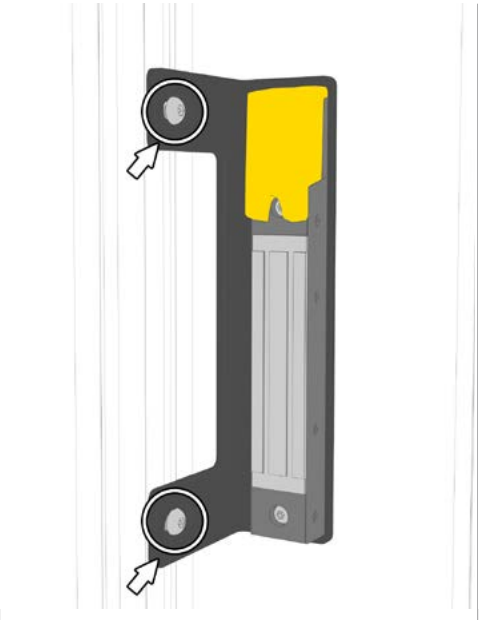

Fig.8: Attach the mounting plate with the process guard locking to the profile and tighten the Torx screws M8 x 12 mm.

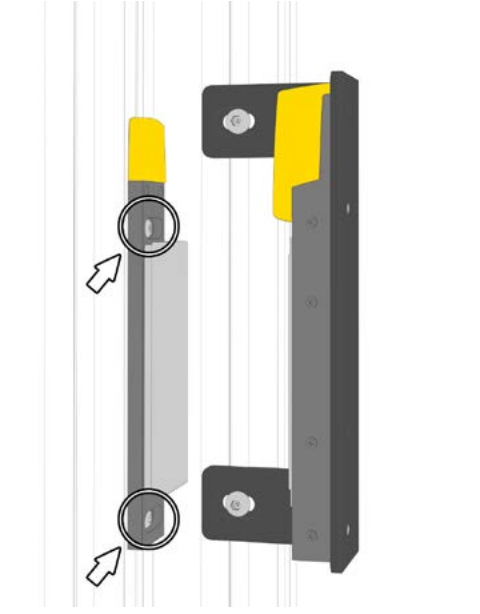

Fig.9: Attach the anchor plate to the profile of the sliding door and align it with the process guard locking. Tighten the Torx screws M6 x 10 mm.

All screws used are Torx pan-head screws with countersunk pin (safety screws) and are tightened to 6 Nm.

See Section 11.1 for screws and mounting plate as additional equipment

3.7 Approach directions

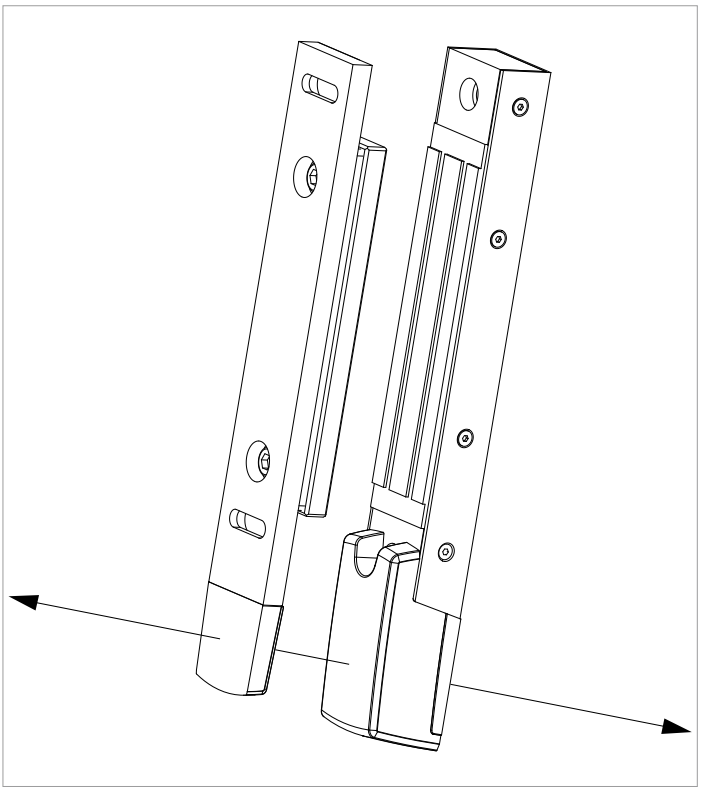

Fig.10: Direction of approach is frontal.

3.8 Switching distance

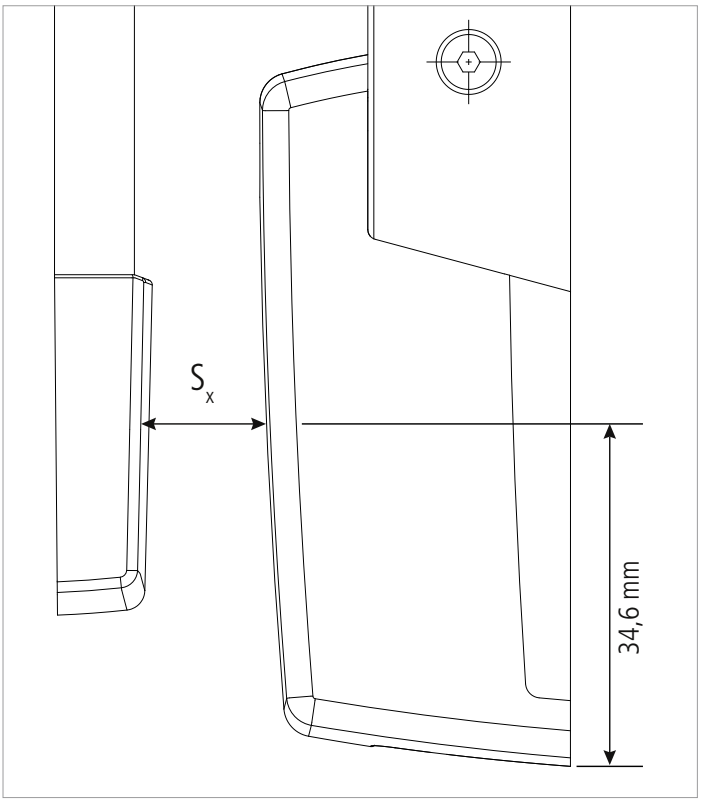

Fig.11: S_x ecorresponds to S_{ao}, S_n, S_{ar}

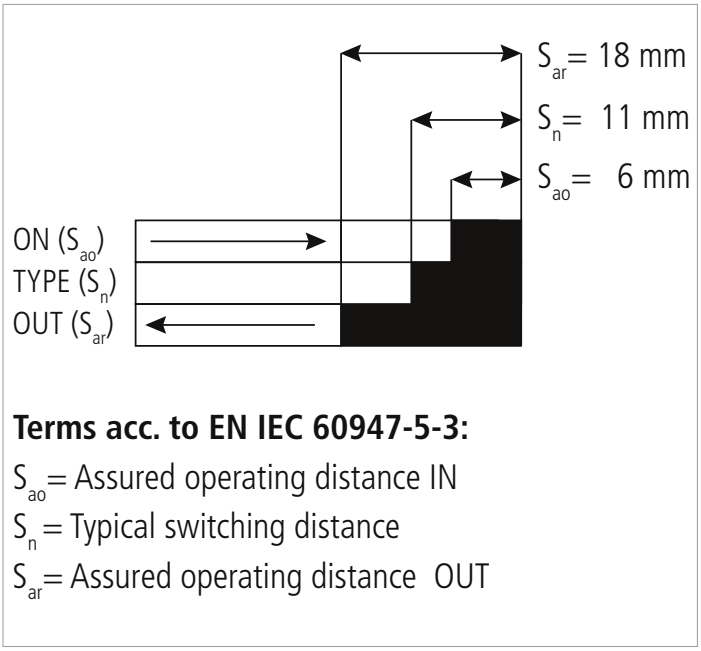

Fig.12: Switching distance

3.9 Limit range monitoring

If the actuator is in the limit range of the switching distances, see Section 2.9 Technical data, with the corresponding offset values of the sensor, this information is transmitted to a PLC (output serial-out pin 5) or displayed via the LEDs, see Section 6.2.

4. Electrical connection

4.1 General notes for electrical connection

The electrical connection should only be performed in a de-energized state by authorized skilled personnel. The safety outputs can be used directly for wiring in the safety-relevant part of the user control. For requirements in PL e/category 4 according to EN ISO 13849-1, the safety outputs of the safety sensor or the sensor chain are to be evaluated with the same category.

Note

To ensure safety, both safety outputs must always be evaluated. Since the diagnosis output is not a safety output, it must not be used for safety-relevant signaling and control functions.

4.2 Requirements for a downstream evaluation

Two-channel safety input, suitable for p-switching sensors with normally open function. Possible evaluation units:

- SSP Safety Simplifier
- SSP safety relay S Series
- ReeR MOSAIC M1

If the process guard locking with safety function is linked to a relay or non-safe control components, a new risk assessment must be carried out. The process guard locking with safety function tests its safety outputs by cyclic shutdown. A cross-circuit detection in the evaluation unit is therefore not necessary. The test pulses of the OSSD signals must be tolerated by the evaluation. The switch-off time of the process guard locking with safety function is additionally extended depending on the cable length and the capacity of the cable used.

4.3 Safety controller configuration

The two safety outputs can be connected to the inputs of a safety controller under the following conditions:

- The input must be suitable for clocked safety signals (OSSD signals).
- The device generates its own test pulses on the safety outputs.
- A downstream control unit must tolerate these test pulses, which can have a length of up to 0.3 ms.
- Do not use a control unit with test pulses or switch off the test pulses of your control unit.

4.4 Electrical connection diagram

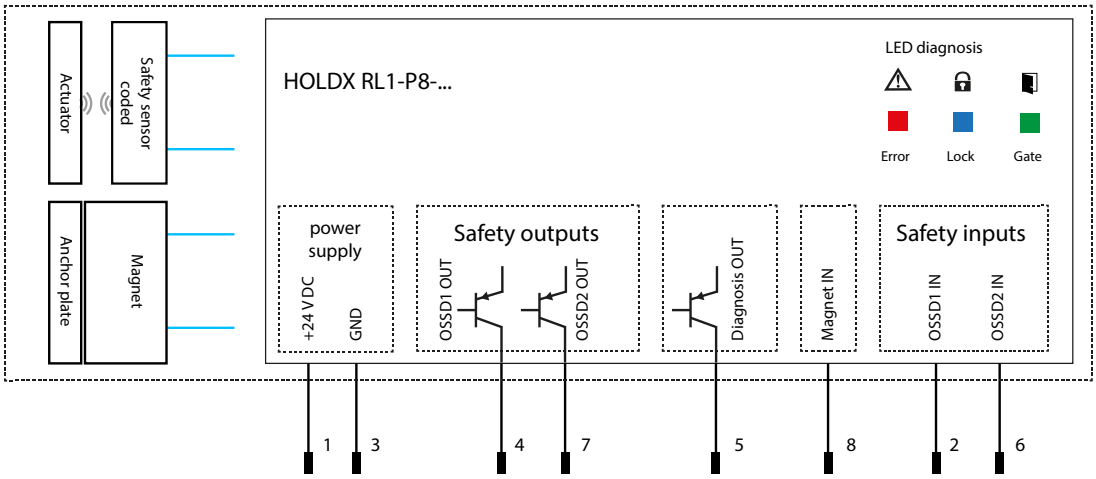

Fig.13: HOLDX RL1 standalone 8-pin pigtail without reset function

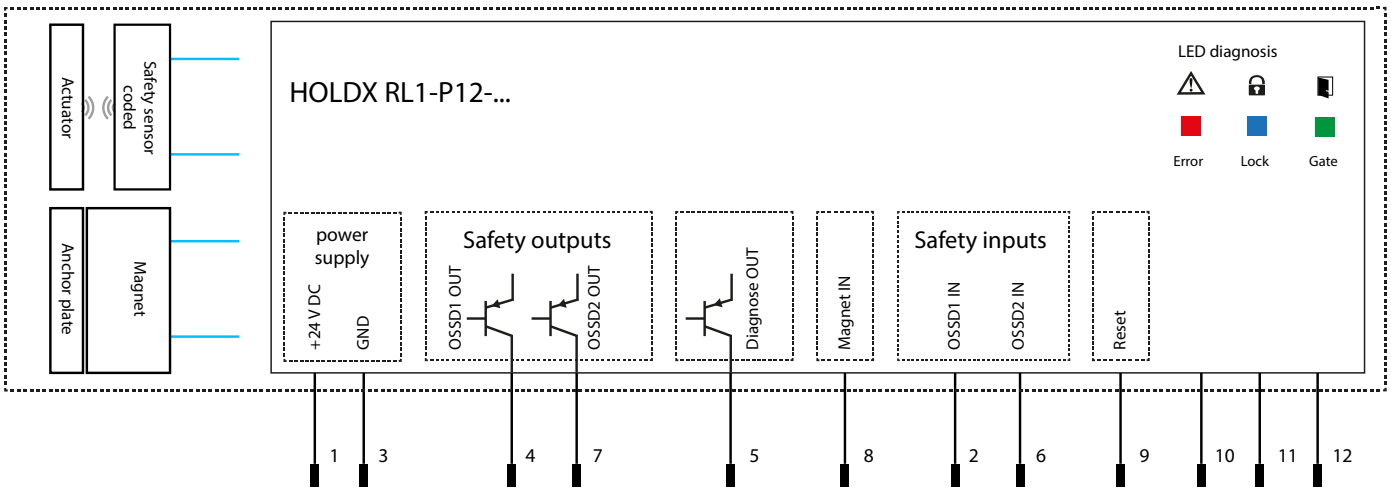

Fig.14: HOLDX RL1 standalone 12-pin pigtail with reset function manual reset

5. Inputs and outputs function

5.1 Mode of operation of the safety outputs

The process guard locking with safety function has 2 short-circuit-proof safety outputs (OSSD) Pin 4 and Pin 7, which can switch a max. load of 100 mA per channel. The safety outputs switch through under the following conditions:

- The correct anchor plate is detected in the detection zone (protective device closed).
- A high signal is present at both safety inputs Pin 4 and Pin 7.
- No error is detected.

The process guard locking with safety function switches off under the following conditions:

- There is no or the incorrect anchor plate in the detection zone.
- A low signal is present at one of the two inputs.
- An error is detected.

The two safety outputs can be connected to the inputs of a safety controller under the following conditions:

- The input must be suitable for clocked safety signals (OSSD signals); the control unit must tolerate test pulses on the input signals with a length of up to 0.3 ms, see Section 2.9 Technical data. Please observe the instructions of the control unit manufacturer. Wiring examples can be found in Section 10.1.

The current status of the safety outputs can be checked at any time via the optional built-in Bluetooth interface and the "HOLDX-Manager" software.

5.2 Safety inputs

The process guard locking with safety function has 2 safety inputs Pin 2 and Pin 6.

- If the process guard locking is used individually, the safety inputs must be connected to +24 VDC.
- When using the process guard locking in a series connection, the safety inputs of the first sensor are connected to +24 VDC - the safety inputs of the following process guard locking are connected to the safety outputs of the previous sensor. Please also refer to Section 2.6 Series connection
- Pulses with a duration of max. 900 µs are tolerated at the safety inputs. Wiring examples can be found in Section 10.1.

The current status of the safety inputs can be checked at any time via the optional built-in Bluetooth interface and the "HOLDX-Manager" software.

5.3 Reset input, only with version HOLDX RL1-12P

Monitored reset input

Connect an external start button of your machine control to the reset input. The reset input is only recognized as correctly set; if at least one valid start pulse is detected after the sensor has been actuated and the safety inputs have been set. The valid start pulse is detected if a falling edge is detected after a rising edge within the permissible start pulse duration of between 30 ms and 5 s. Examples can be found in Section 10.1.

5.4 Input magnet on

The process guard locking with safety function has a "Pin 8 input" to switch on the magnet. When a high signal is applied at the input, the magnet directly builds up the magnetic field, independent of the door position.

The magnet input can only be activated 5 s after switching on the voltage supply.

Attention

Possible danger of crushing must be taken into account in the risk assessment.

If required, the function that the door is closed before the magnet builds up its magnetic field can be set with a functional module in the standard PLC.

Functional modules for various PLC systems are available under www.safety products.de.

The magnet can be switched on and off manually, e.g. during the commissioning phase or during maintenance operation, using the optional built-in Bluetooth interface and the "HOLDX-Manager" software.

5.5 Diagnosis output

The short-circuit-proof diagnosis output "Serial out Pin 5" can be used for control and diagnosis tasks.

Note

The diagnosis output is not a safety-related output

The functional modules for various PLC systems are available under www.safety products.de.

The current status of the diagnosis output as well as the individual configuration can be checked or configured at any time via the optional built-in Bluetooth interface and the "HOLDX-Manager" software.

Depending on the PLC used, it may be necessary to adjust the pulse width (T_H, T_L) for optimal communication with the PLC. This can be set in a range from 5 to 50 ms. The pause time until the next cycle is always the same at 90 ms.

Pulse diagram

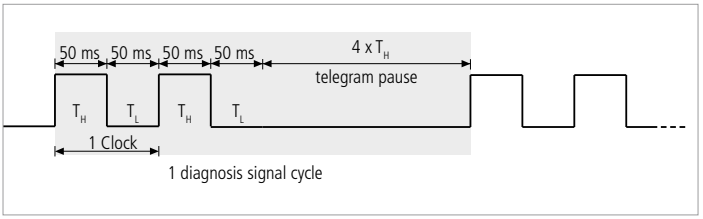

Fig.15: Pulse diagram - factory setting: Example for clock 2x.

Configuration	$T_H = T_L$	Telegram pause
Factory setting	50 ms	4 x T_H
Individual	5 ... 50 ms	4 x T_H

6. Operating states and diagnosis

6.1 Switching and operating states

OSSD input Pin 2 + Pin 6	Magnet ON Pin 8	Door position	Magnetic flux undercut	Switching distance in limit range	OSSD output Pin 4 + Pin 7	Diagnosis output Pin 5
On/off	Off	Open			Off	Clock 1x
Off	Off	Closed			Off	Clock 2x
On	On/off	Closed			On	Clock 3x
On	On	Open			Off	Clock 4x
Off	On	Closed			Off	Clock 5x
On	On	Closed			On	24 V
Off	On	Closed	x		Off	Clock 6x
On	On	Closed	x		On	Clock 7x

Table 1: Switching and operating states

6.2 LED display, flashing codes, clocking diagnosis output

Color	Function	Diagnosis output Pin 5	Possible cause	Possible remedy
Green	Safe sensor function			
On	OSSD input circuit available, Door closed			
Flashes 1 x	Door opened	Clock 1		
Flashes 2 x	OSSD input circuit not available Door closed	Clock 2	- One door incl. process guard locking opened in the previous circle - Wiring error - Cable interruption	- Close all doors - at pin 2 and pin 6 +24 V - or connect the output signals of the previous process guard locking
Flashes 4 x	OSSD input circuit not available Door opened	Clock 22	- One door incl. process guard locking opened in the previous circle - Wiring error - Cable interruption	- Close all doors - at pin 2 and pin 6 +24 V - or connect the output signals of the previous process guard locking
Blue	Guard locking function			
off	Magnet not actuated			
on	Door closed, locking force available			
Flashes 1 x	Door closed, Locking force not reached		- Unit soiled - Alignment of the anchor plate not correct - Incorrect calibration	- Clean HOLDX and the anchor plate - Check alignment of HOLDX to the anchor plate - Recalibrate with HOLDX Manager
Flashes 2 x	Door opened, magnet actuated		- Magnet actuated and the door opened	- Close the door
Rot	Fault diagnosis			
off	No error present			
on	Internal device error	Clock 18	- Internal device error	- Switch off and apply again the power supply - Return to supplier in case of recurrence
Flashes 1 x	Error safety outputs	Cycle 11	- Short circuit between safety outputs, against ground or against +24 V DC	- Switch off the power supply - Repair the short-circuit/wire break at the output - Apply again the supply voltage
Flashes 2 x	Error safety inputs	Clock 12	- Short circuit between safety inputs, against ground or against +24 V DC - Only one of the two safety inputs available - Wire break	- Switch off the power supply - Repair the short-circuit/wire break at the output - Apply again the supply voltage
Flashes 3 x	Overvoltage or undervoltage	Clock 13	- The supply voltage was not applied in the defined area	- Switch off the power supply - Ensure the correct power supply and apply the power supply again
Flashes 4 x	Error door torn opened	Clock 14	- Door was forcibly opened when the max. locking force was exceeded	- Switch off and apply again the power supply
Flashes 5 x	Temperature outside the Permitted range	Clock 15	- The defined temperature range has been undercut or exceeded	- Switch off the power supply - Ensure correct ambient temperature - Apply again the supply voltage
Flashes 6 x	Wrong RFID actuator	Clock 16	- Incorrect actuator in sensor detection zone	- Use correct actuator
Flashes 8 x	Set $B10_D$ values in limit range	Clock 20	- Value achieved for replacement of connected relay module (user programmed)	- Replacement
Green	Red	Blue				
on	on	on	off	Device start	
flashes 2x	flashes 2x	flashes 2x	Clock 19	Teach-in process only for relearnable version	
flashes 1x	flashes 1x	flashes 1x	Clock 21	Teach-in process CAN	

Table 2: LED display, flashing codes, clocking diagnosis output

7. Commissioning

7.1 Function Test

The function of the HOLDX process guard locking has to be checked. Ensure the following before you start:

- The process guard locking and the corresponding anchor plate are firmly seated
- The supply line is firmly seated and not damaged
- The system is free of all contamination

7.2 Teach-in process

Teach-in process of the version "Individual, relearnable"

The first permissible actuator is detected immediately after the supply voltage is applied if it is within the detection range of the sensor. Each further teach-in of an actuator must be carried out as described below:

1. Apply power supply to the safety sensor (Important: Anchor plate must not be in the detection zone)
2. After switching on, bring a permissible anchor plate into the detection range of the process guard locking
3. Anchor plate is detected, red LED flashes six times
4. After 10 s the LEDs red, green and blue flash simultaneously
5. Switch off the power supply within the next 2 min
6. Apply new power supply, then the teach-in process is completed and the anchor plate is accepted
7. If a new anchor plate is taught-in, the process guard locking blocks the code of the last predecessor, that is no longer permissible then
8. Do not remove the anchor plate during this procedure as long as it is within the detection range

If the teach-in process is aborted, the power supply must be switched off and the process restarted. The teach-in of actuators to a safety sensor is possible an unlimited number of times as long as the code of the actuator is not blocked in the sensor.

Information

The optional built-in Bluetooth interface and the "HOLDX-Manager" software can be used at any time to check how often an anchor plate has been taught in.

8. Maintenance

8.1 Maintenance

The process guard locking with safety function is maintenance-free. If during the operation faults or failures of unknown origin occur, replace the process guard locking with safety function. Damaged or defective process guards with safety function or plug connectors must not be repaired and have to be replaced. If the process guard locking with safety function is exposed to excessive loads, additional safety measures may be necessary.

8.2 Damaged or defective devices

Damaged or defective devices must be replaced with original spare parts! In the "Individual" version, the process guard locking AND the anchor plate must be replaced. With the "Individually relearnable" version, the teach-in process must be carried out when the process guard locking OR the anchor plate is replaced. (see type code in Section 2.2)

9. Disassembly and Disposal

9.1 Removal

Disassembly of the process guard locking HOLDX RL1 should only be performed in a de-energized state.

9.2 Disposal

The process guard locking HOLDX RL1 must be disposed of properly in accordance with national and local regulations.

10. Appendix

10.1 Electrical connection

Note:

The illustrated examples are only suggestions. The user has the responsibility to design the overall system in compliance with applicable rules and regulations.

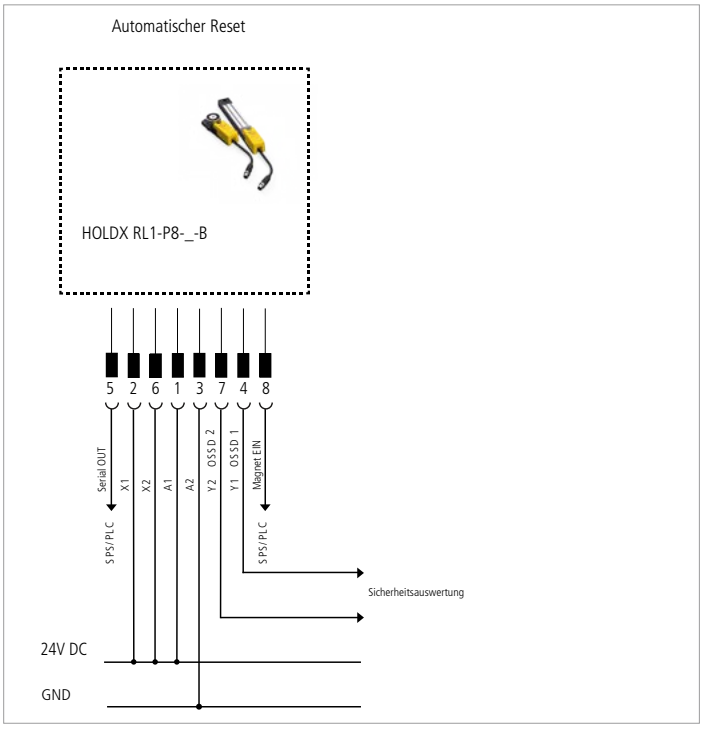

Fig.16: Connection example 1

Connection HOLDX RL1-P8, automatic reset.
The inputs X1 and X2 are connected with 24 VDC. Outputs Y1 and Y2 are routed to a safety evaluation. The diagnosis output pin 5 and the input magnet ON can be connected e.g. to a PLC.

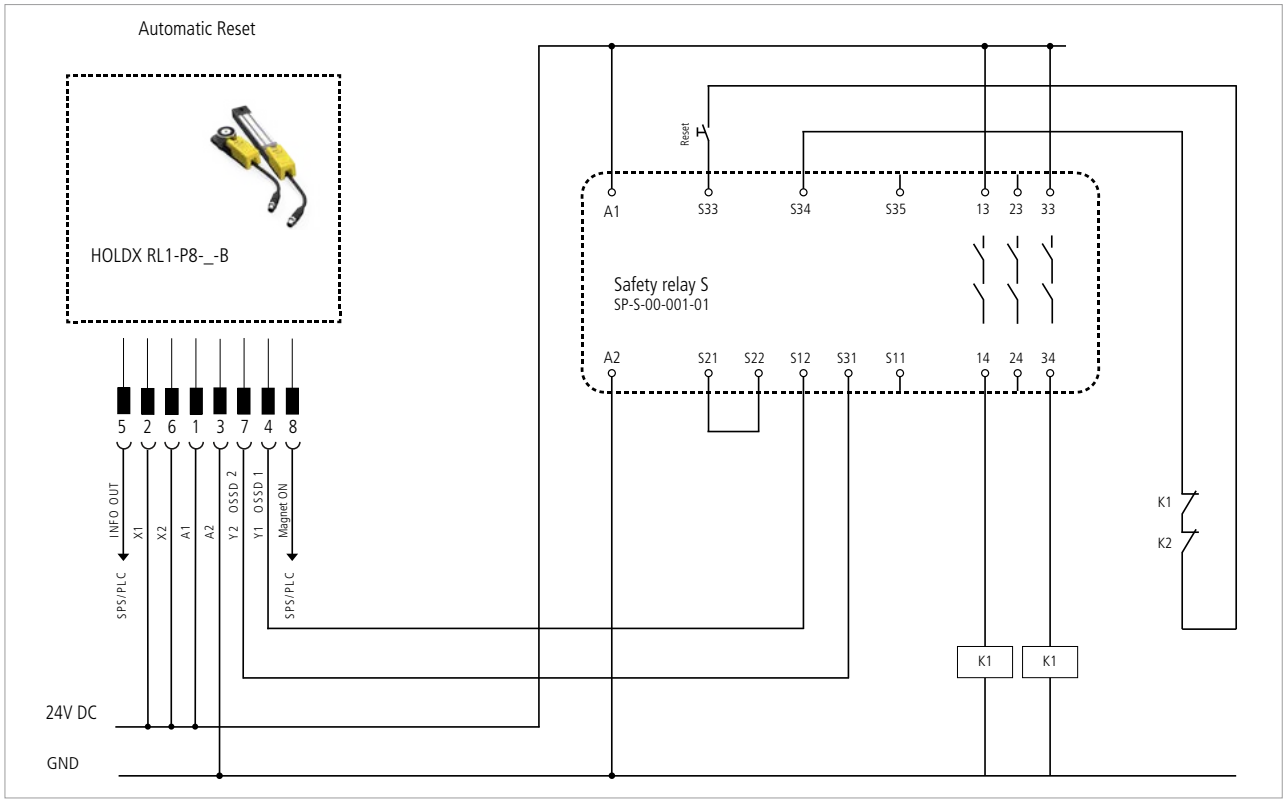

Fig.17: Connection example 2

Connection HOLDX RL1-P8, safety relay S series with manual reset.
The inputs X1 and X2 are connected with 24 VDC. Outputs Y1 and Y2 are connected to the SSP safety relay S series. Two contactors are connected to the safety relay and monitored in the reset input of the safety relay. The diagnosis output pin 5 and the input magnet ON can be connected e.g. to a PLC.

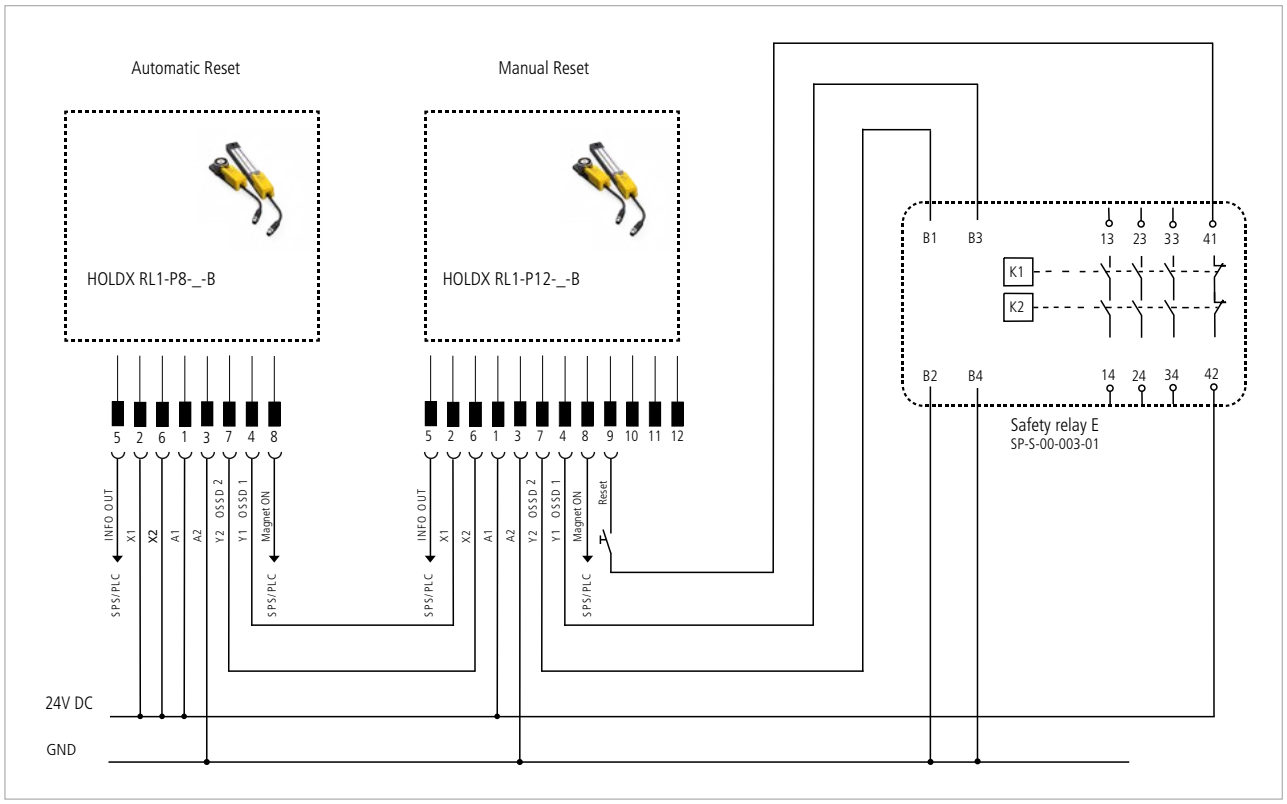

Fig.18: Connection example 3

Series connection of two smart HOLDX RL1 process guards with E series safety relays and manual reset
The inputs X1 and X2 are connected with 24 VDC. Outputs Y1 and Y2 are connected to the SSP safety relay E series. The feedback circuit of the safety relay is connected in series with the reset button at reset input 9 of the process guard locking. The diagnosis output pin 5 and the input magnet ON can be connected e.g. to a PLC.

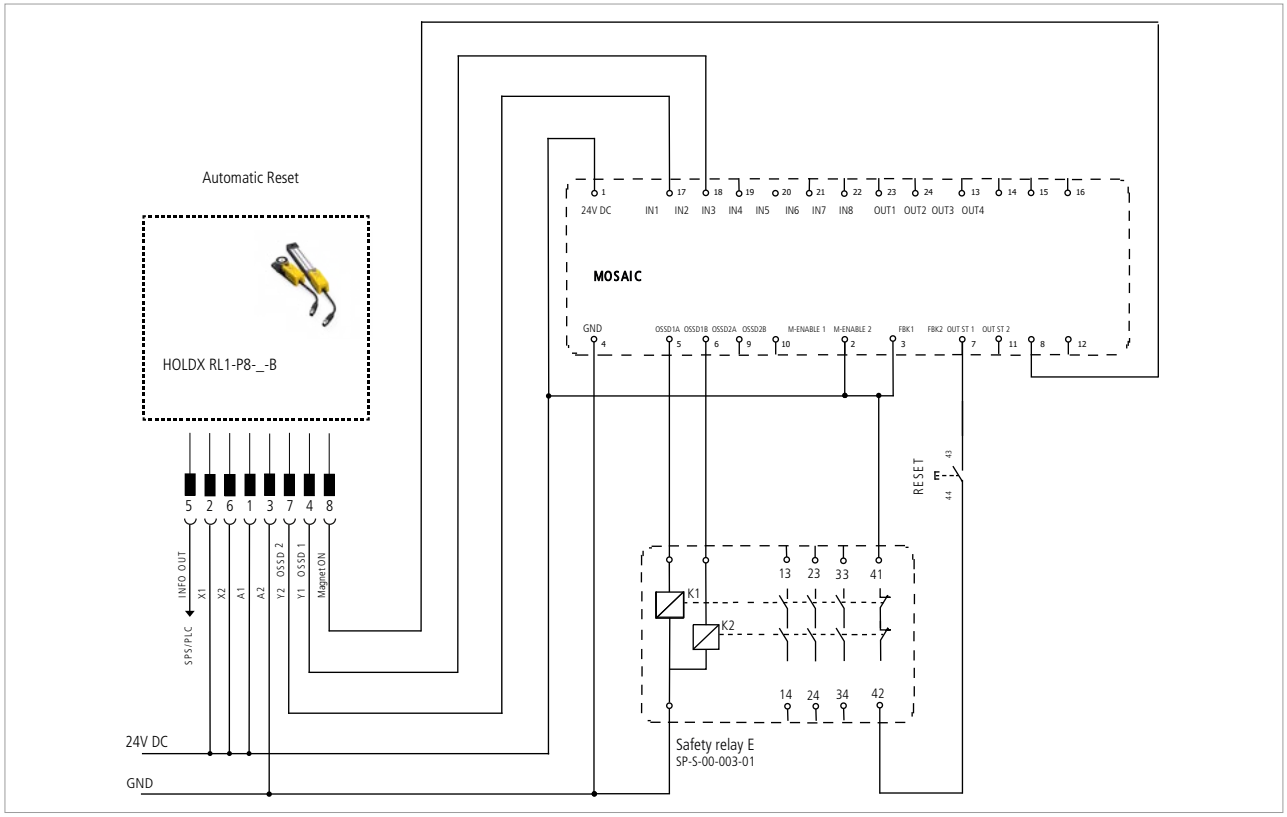

Fig.19: Connection example 4

HOLDX RL1-P8, Mosaic Safety PLC

The inputs X1 and X2 are connected with 24 VDC. Outputs Y1 and Y2 are connected to two inputs on the Mosaic safety PLC. The serial OUT diagnosis output can be connected, for example, to a standard PLC. The magnet ON input can be controlled, for example, by the Mosaic safety PLC or a standard PLC.

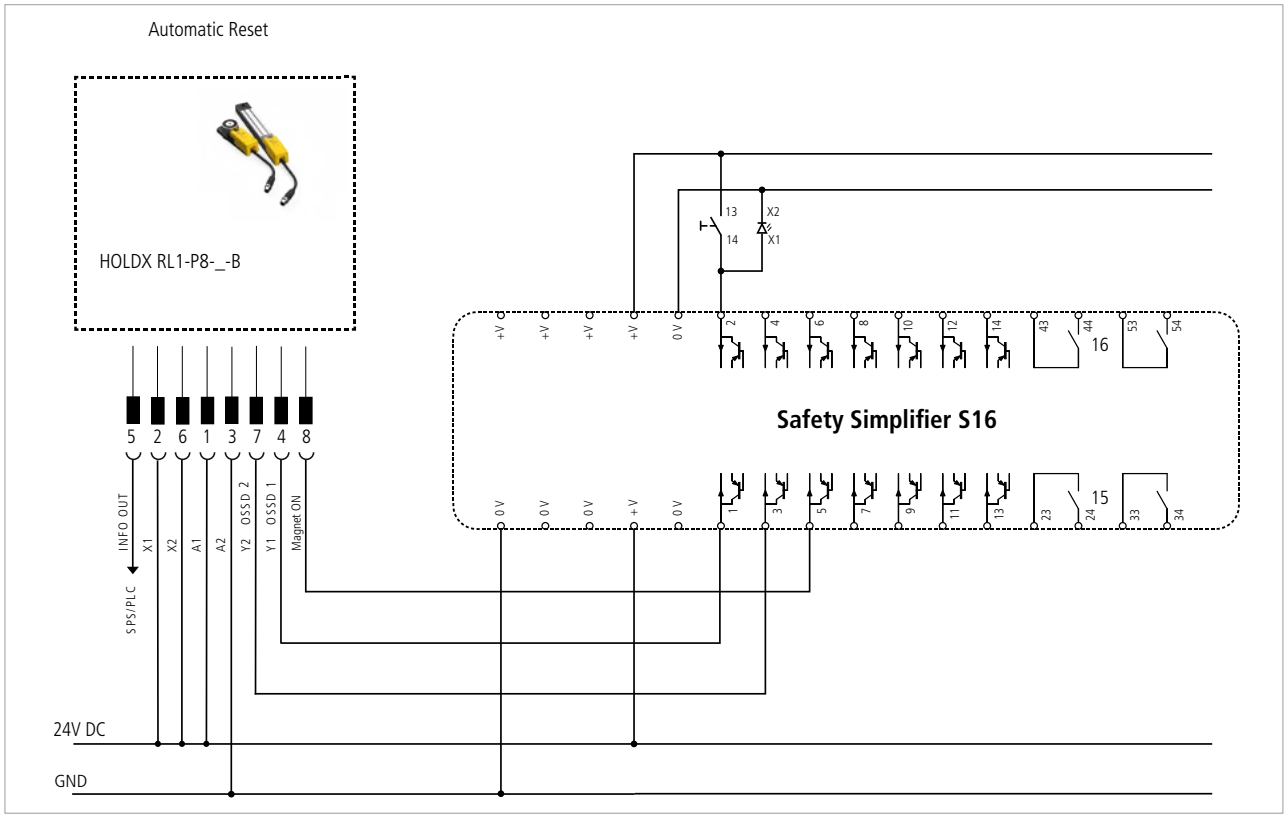

Fig.20: Connection example 5

HOLDX RL1-P8 connection, wireless safety PLC Safety Simplifier.

The inputs X1 and X2 are connected with 24 VDC. Outputs Y1 and Y2 are connected to two inputs on the Safety Simplifier. The diagnosis output pin 5 can be connected, for example, to a standard PLC. The magnet ON input can be controlled, for example, by the Safety Simplifier or a standard PLC.

11. Equipment

11.1 Equipment for HOLDX RL1

Item	Denomination	Item no.
Anchor plate		
Anchor plate with RFID tag - fixed grid 50 N	HOLDX RL-A1	SP-X-71-001-40
Anchor plate with RFID Tag - no grid	HOLDX RL-A2	SP-X-71-001-41
Mounting plates		
HOLDX RL installation kit for wing doors	HOLDX RL1-Z-MF1	SP-X-71-002-00
HOLDX RL installation kit for sliding doors	HOLDX RL1-Z-MS1	SP-X-71-002-01
Bolts		
Cable		
M12 socket plug, 8-pin open end, 5 m	C8D5	SP-R-13-309-80
M12 socket plug, 8-pin open end, 10 m	C8D10	SP-R-13-309-81
M12 socket plug, 8-pin open end, 15 m	C8D15	SP-R-13-309-82
M12 socket plug, 8-pin open end, 25 m	C8D25	SP-R-13-309-67
M12 socket plug, 8-pin open end, 40 m	C8D40	SP-R-13-309-66
Connector plug 120 Ohm for HOLDX RL2	HOLDX R1	SP-X-71-002-06
Evaluation units		
Simplifier		
Wireless distributor Safety Simplifier 4 slots M12 5-pin	S14LDRB-H10-Q1A-Q2A-Q3C-Q4A-Q5I-Q6I-Q7I-Q8I-W34	SP-X-89-100-01
Wireless safety controller Safety Simplifier 14 safe I/O's plus 2 double relay outputs	S16LDRB-H10-Q1A-Q2A-Q3A-Q4A	SP-X-89-000-03
Wireless safety controller Safety Simplifier 14 safe I/O'	S14LDRB-H10-Q1A-Q2A-Q3A-Q4A	SP-X-89-000-04
MOSAIC		
	MOSAIC M1	SP-R-11-000-00
Safety relays		
Basic device for emergency off and safety door applications	Safety relay S Series	SP-S-00-001-01

to be ordered separately

12. Declaration of Conformity

12.1 EC Declaration of Conformity

EC Declaration of Conformity

SSP Safety System Products GmbH & Co. KG
Zeppelinweg 4
78549 Spaichingen
Germany
www.safety-products.de

We hereby declare that the following components comply with the requirements of the European Directives listed below with regard to their design and construction.

Denomination of the component	HOLDX RL1	
Description	Magnetic process guard locking	
The designated products comply with the requirements of the directives:	2006/42/EC Machinery Directive 2014/53/EU - RED Directive 2014/30/EU - EMC 2014/65/EU - RoHS	
Applied standards	EN ISO 13849-1: 2015 EN IEC 62061: 2015 EN ISO 14119: 2013	EN 60947-5-3:2013 EN 300 330 V2.1.1 EN 55011: 2009/A1:2010 EN 61326-3-1: 2008
Authorized representative for the compilation the technical documentation:	Wolfgang Engelhart Max-Planck-Straße 21 78549 Spaichingen	
Place and date of issue	Spaichingen, Germany, Monday, April 1, 2019	





Legally binding signature
Johann Aulila
CEO

Wolfgang Engelhart
Deputy CEO

Note
Signed EC Declaration of Conformity is available at the SSP website: www.safety-products.de

CE

SSP Safety System Products GmbH & Co. KG
Zeppelinweg 4
78549 Spaichingen
+49 7424 98 049-0
info@ssp.de.com
www.safety-products.de